جامعة حفر الباطن
University of Hafr Al Batin

Lecture 5 - IP Addresses and Classful Addressing

Objectives

- IP addresses Conversion.
- Classful Addressing.
- Network Addresses.
- Network Mask

IP addressing: Conversion

- **Binary to Decimal**
  - Use the binary table.

128	64	32	16	8	4	2	1

- Example
  - Convert: 10101000

128	64	32	16	8	4	2	1
1	0	1	0	1	0	0	0

  - Answer = 128+32+8 =**168** (Decimal)

Decimal to Binary

- Divide by two and read the remainder bottom up

Example

- Convert 168
- Answer = **10101000**

168	2	0
84	2	0
42	2	0
21	2	1
10	2	0
5	2	1
2	2	0
1	2	1

IP addressing: Conversion

- Binary to Decimal

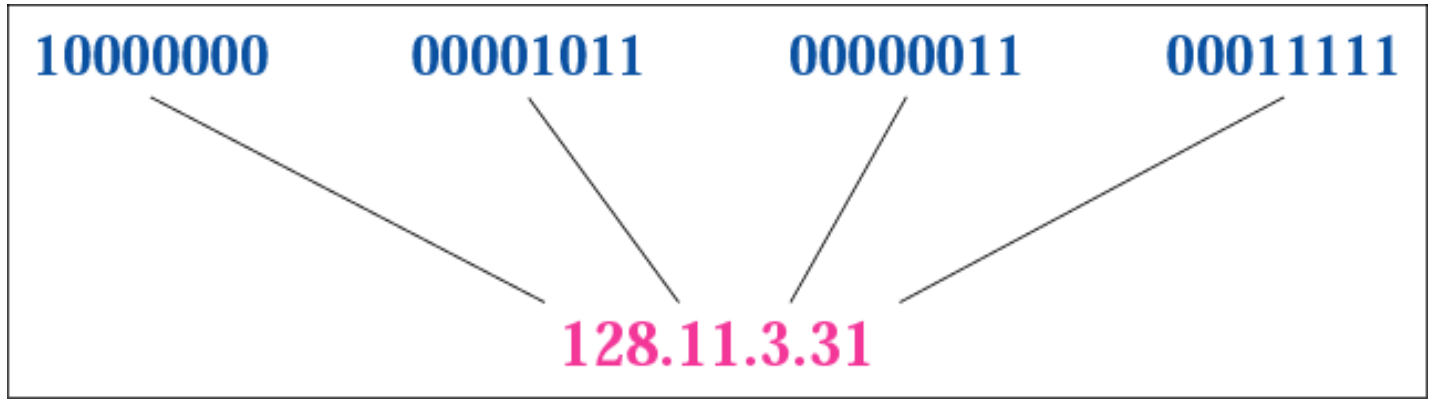

IP addressing: Conversion

- Binary to Hexadecimal

0111 0101 1001 0101 0001 1101 1110 1010

75 95 1D EA

0x75951DEA

Hexadecimal	Binary
1	0001
2	0010
3	0011
4	0100
5	0101
6	0110
7	0111
8	1000
9	1001
A	1010
B	1011
C	1100
D	1101
E	1110
F	1111

IP addressing: Conversion

- **Question:**
  - Change the following IP address from binary notation to dotted-decimal notation

10000001 00001011 00001011 11101111

- **Answer:**

129.11.11.239

IP addressing: Conversion

- **Question:**
  - Change the following IP address from dotted-decimal notation to binary notation.

111.56.45.78

- **Answer:**

01101111 00111000 00101101 01001110

IP addressing: Conversion

- **Question:**
  - Change the following IP addresses from binary notation to hexadecimal notation.

10000001 00001011 00001011 11101111

- **Answer:**

0X810B0BEF **or** **810B0BEF16**

Classful Addressing

Classful Addressing

- In classful addressing, the address space is divided into five classes: A, B, C, D, and E.
  - Millions of class A addresses are wasted.
  - Many class B addresses are wasted.
  - The number of addresses in a class C block is smaller than the needs of most organizations.
  - Class D addresses are used for multicasting.
  - Class E addresses are reserved for special purposes; most of the block is wasted.

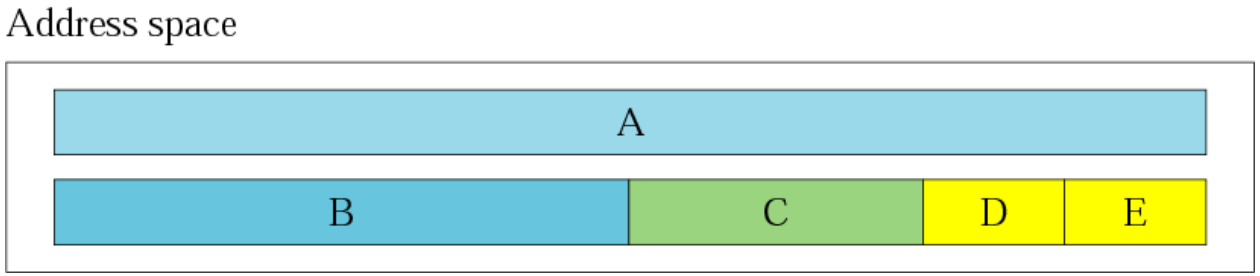

Finding the Class

- In Binary notation:

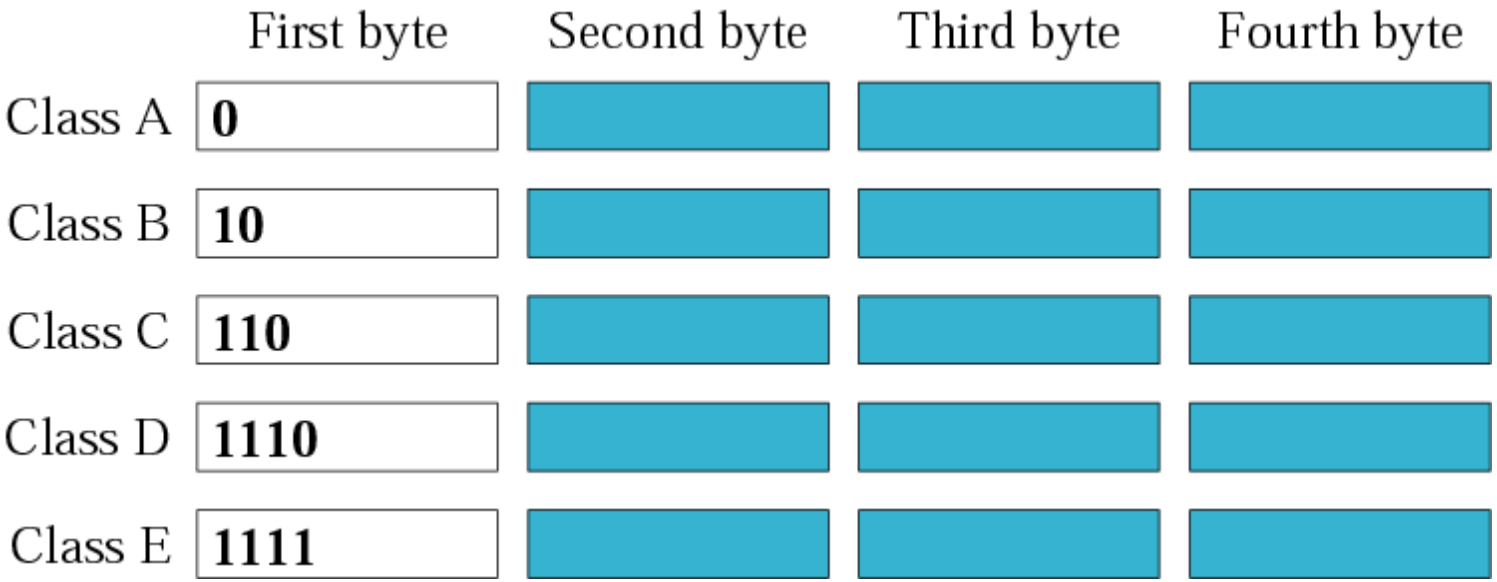

Finding the Class

- In Binary notation:

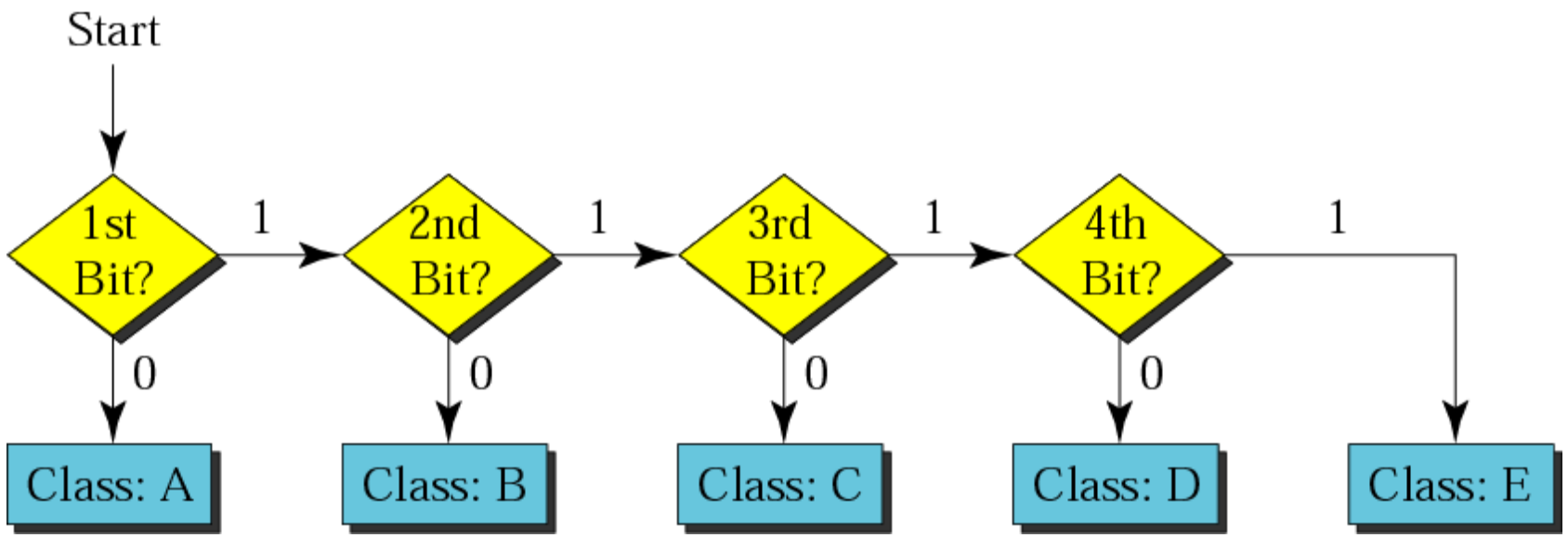

Finding the Class

- In Decimal notation:

	First byte	Second byte	Third byte	Fourth byte
Class A	**0 to 127**			
Class B	**128 to 191**			
Class C	**192 to 223**			
Class D	**224 to 239**			
Class E	**240 to 255**			

Finding the Class

- **Question:**
  - Find the class of the address:

00000001 00001011 00001011 11101111

- **Answer:**

The first bit is 0. This is a class A address.

Finding the Class

- **Question:**
  - Find the class of the address:

11000001 10000011 00011011 11111111

- **Answer:**

The first 2 bits are 1; the third bit is 0.

This is a class C address.

Finding the Class

- **Question:**
  - Find the class of the address:

227.12.14.87

- **Answer:**

The first byte is 227 (between 224 and 239);

This is a class D address.

Finding the Class

- **Question:**
  - Find the class of the address:

193.14.56.22

- **Answer:**

The first byte is 193 (between 192 and 223);

the class is C.

Netid and Hostid

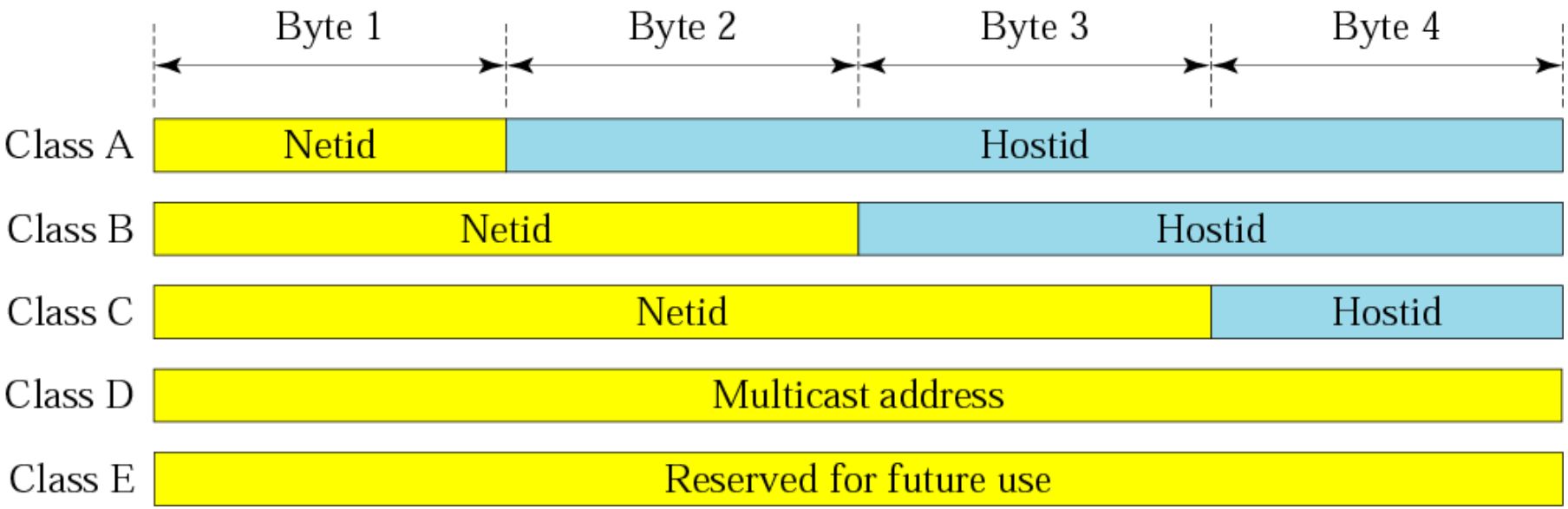

Blocks in Class A

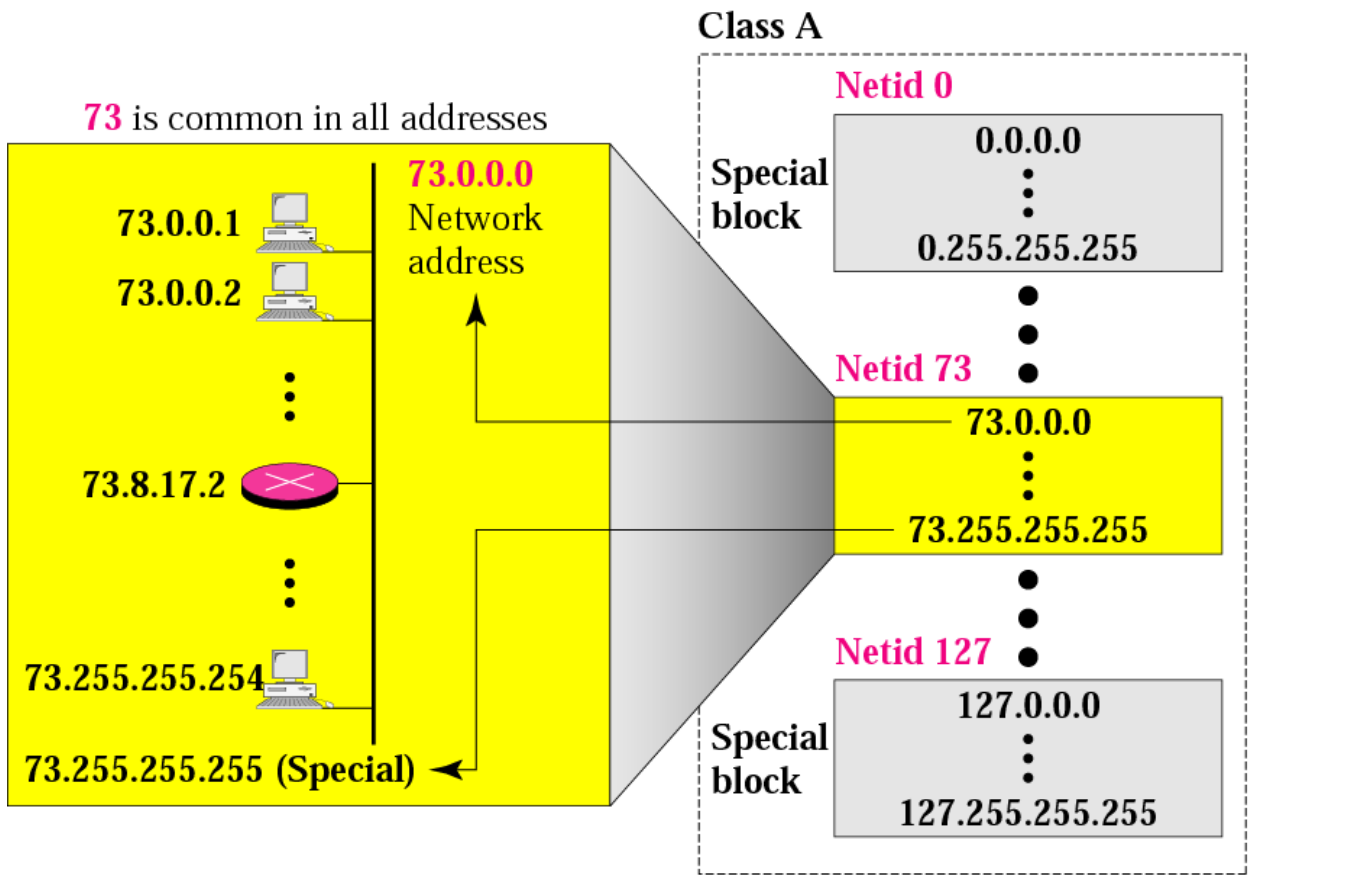

128 blocks: 16,777,216 addresses in each block

Blocks in Class B

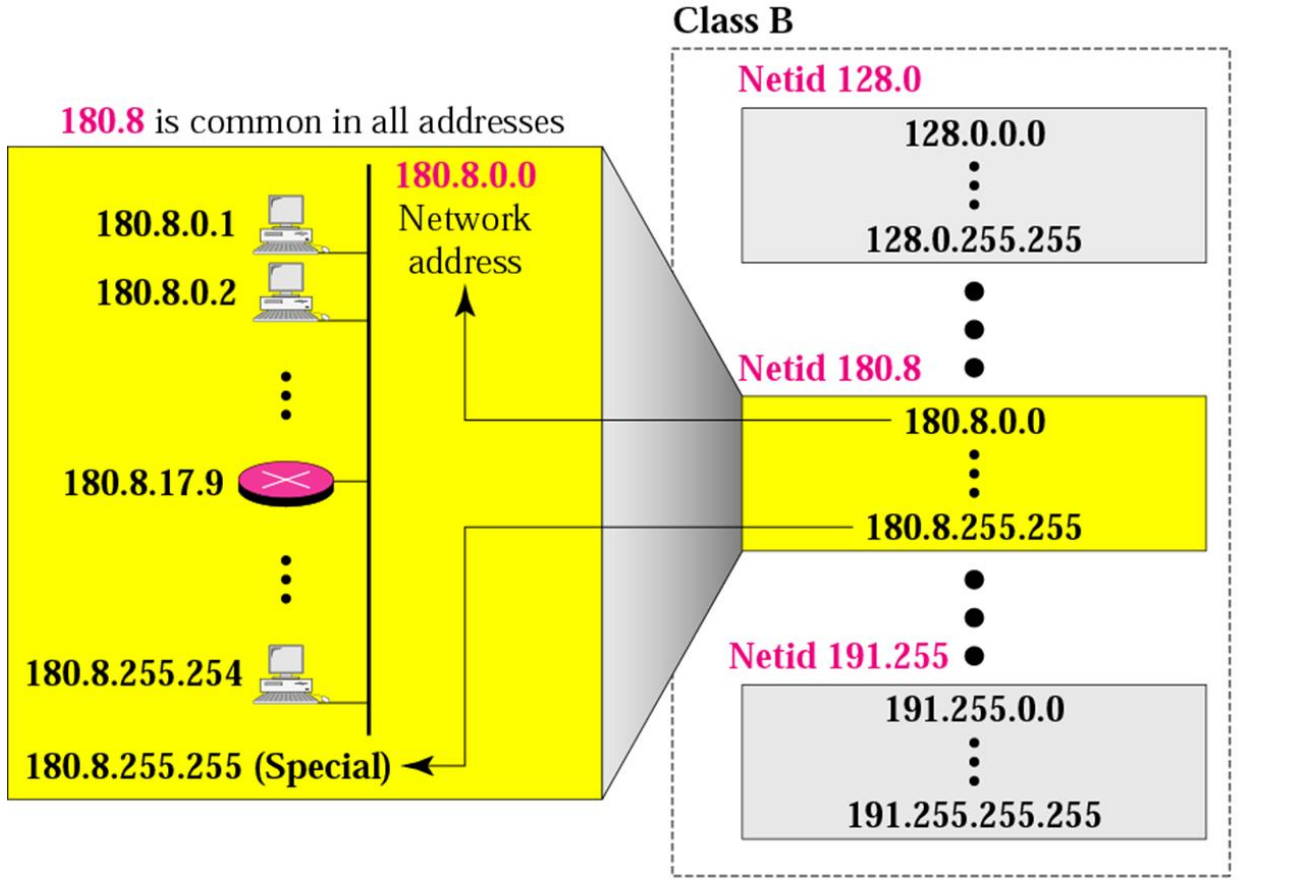

16,384 blocks: 65,536 addresses in each block

Blocks in Class C

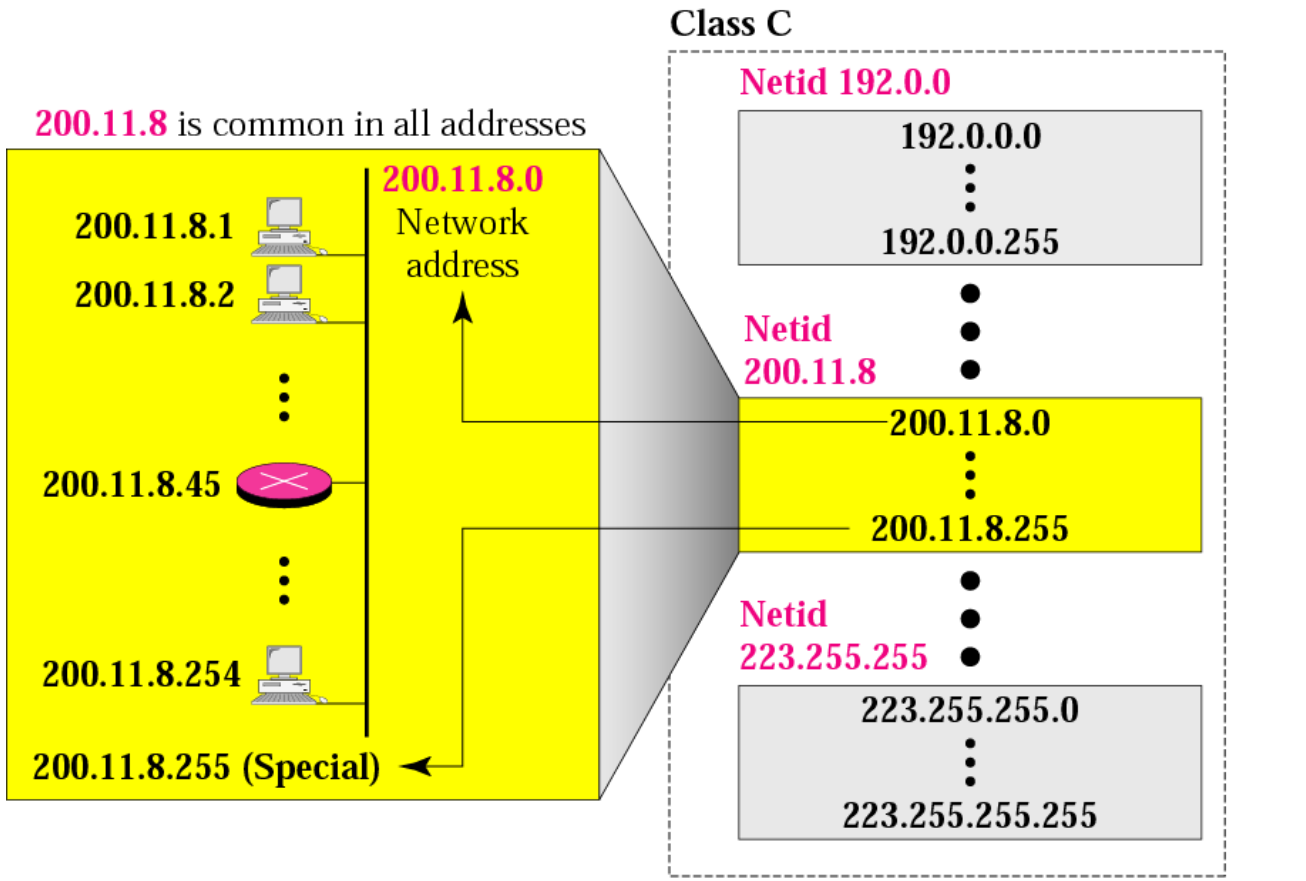

2,097,152 blocks: 256 addresses in each block

Network Address

- **The network address: is the address that defines the network to the rest of the Internet.**
- The network address is the first address.
- Given the network address, we can find the class of the address, the block, and the range of the addresses in the block
- In classful addressing, the network address is the one that is assigned to the organization.

Network Address

- **Question:**
  - Given the network address 17.0.0.0, find the class, the block, and the range of the addresses.

- **Answer:**

The class is A because the first byte is between

0 and 127.

The block has a netid of 17.

The addresses range from 17.0.0.0 to 17.255.255.255.

Network Address

- **Question:**
  - Given the network address 132.21.0.0, find the class, the block, and the range of the addresses.

- **Answer:**

The class is B because the first byte is between

128 and 191.

The block has a netid of 132.21.

The addresses range from 132.21.0.0 to 132.21.255.255.

Network Address

- **Question:**
  - Given the network address 220.34.76.0, find the class, the block, and the range of the addresses.

- **Answer:**

The class is C because the first byte is between 192 and 223.

The block has a netid of 220.34.76.

The addresses range from 220.34.76.0 to 220.34.76.255.

Network Mask

- **Network Mask:** is a 32-bit binary number that gives the first address in the block (the network address) when bitwise ANDed with an address in the block.

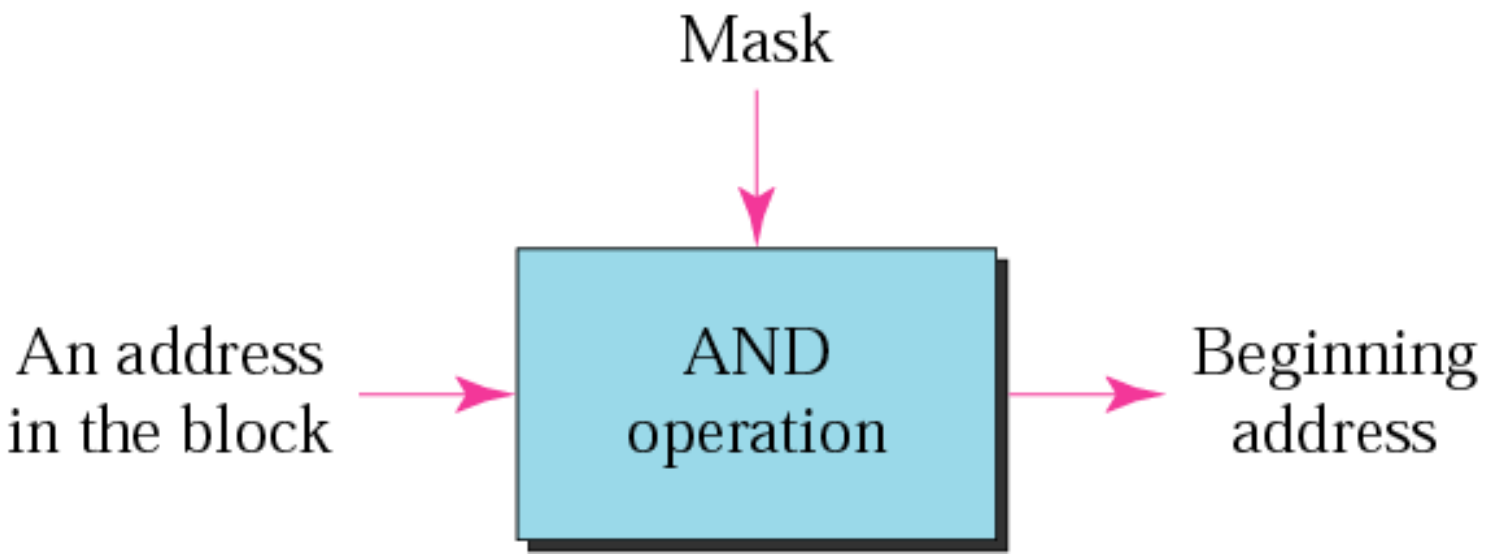

Network Mask

- The network address is the beginning address of each block.
- It can be found by applying the *default* mask to any of the addresses in the block (including itself).
  - It retains the **netid** of the block and sets the **hostid** to zero.
- We must not apply the default mask of one class to an address belonging to another class.

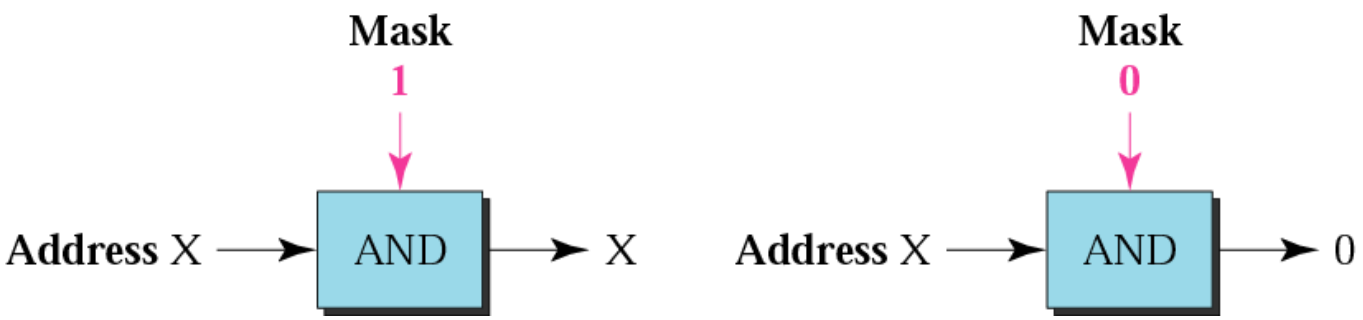

Network Mask

- **Question:**
  - Given the address 23.56.7.91 and the default class A mask, find the beginning address (network address).

- **Answer:**

The default mask is 255.0.0.0,

which means that only the first byte is preserved

and the other 3 bytes are set to 0s.

The network address is 23.0.0.0.

Network Mask

- **Question:**
  - Given the address 132.6.17.85 and the default class B mask, find the beginning address (network address).

- **Answer:**

The default mask is 255.255.0.0,

which means that the first 2 bytes are preserved

and the other 2 bytes are set to 0s.

The network address is 132.6.0.0.

Network Mask

- **Question:**
  - Given the address 201.180.56.5 and the class C default mask, find the beginning address (network address).

- **Answer:**

The default mask is 255.255.255.0,

which means that the first 3 bytes are preserved

and the last byte is set to 0.

The network address is 201.180.56.0.

Unicast, Multicast, and Broadcast Addresses

- Unicast communication is *one-to-one*.
- Multicast communication is *one-to-many*.
- Broadcast communication is *one-to-all*.